3 INSTALL TOWEL BAR OR SHELF

- See detail for the center to center dimension of TOWEL BARS (7) and SHELF (8). For installation of the WALL BRACKETS see step 1.
- The center line of WALL BRACKETS (3) must be level.
- Install ESCUTCHEON (4) onto WALL MOUNTED ACCESSORY.
- Install TOWEL BAR (7) or SHELF (8) with ESCUTCHEON (4) onto installed MOUNTING POST (2). Push WALL MOUNTED ACCESSORY flush against MOUNTING POST (2) and tighten SET SCREW (5) with HEX WRENCH (6) suppied to secure to wall.
- Push ESCUTCHEON (4) against finished wall.

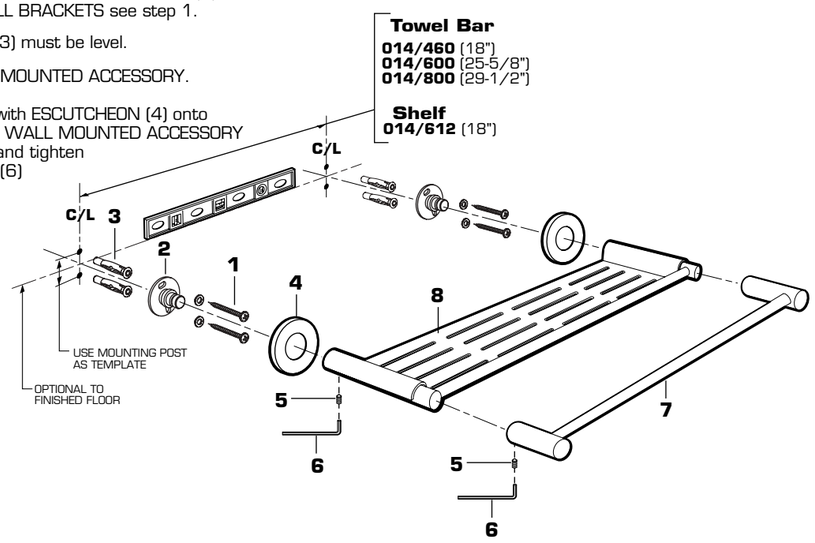

4 HELPFUL HINTS FOR CLEANING AND MAINTENANCE

The solid brass product you have just purchased has been designed to give you years of beauty and service. It is important to bring to your attention proper care and maintenance procedures, which will ensure its lasting beauty.

- First and foremost, it is important (as it is with any fine piece of jewelry or furniture) that the product be wiped clean and dry with a soft damp cloth after every use.
- Second, under no circumstances should an abrasive cleaner or combination cleaner/polish be used on JADO products. The abrasive nature of such products will eventually destroy the finish and void the warranty.
- In the event of stubborn blemishes shown on the finish, we recommend use of Windex window cleaner with a soft cloth, but we do not recommend it be used on an everyday basis.
- It is important to note that it is normal to expect signs of usage over time.
  Thank you for selecting JADO for your home.

TO THE PURCHASER OF JADO BRASS PRODUCTS

Attention installer:
Please leave This Pamphlet for The Owner

NOTICE: JADO products conform to industry requirements of water conservation under the ASTM / ANSI A112.18.1M-1994 plumbing code. Lavatory, bidet, wet bar and kitchen faucet sets have a maximum flow rate of 2.2GPM. Shower heads, hand showers and body sprays have a maximum flow rate of 2.5GPM.

The state of California has mandated under Proposition #65 that manufactures of products, including faucets which come into contact with potable water, must warn the consumer if the product contains materials listed by the state as a carcinogen or reproductive toxin. Lead, which is contained in all brass faucets in limited amounts appears on the State's list.

Preliminary industry tests have indicated that users of faucets made from brass face no significant danger, however, California Proposition #65 requires that we provide you with the following notice:

Warning: This product contains an element known to the State of California to cause cancer of reproductive harm.

JADO BATHROOM AND HARDWARE MFG. CORP.
7845 East Paradise Lane
Scottsdale, AZ 85260

FAUCET LIFETIME FUNCTION AND FINISH LIMITED WARRANTY

JADO Bathroom & Hardware Manufacturing Corp. provides the following warranties only to the first residential owner of our products.
FINISHES
JADO warrants this product to be free from defects in materials or workmanship for as long as the original consumer purchaser owns their home.
JADO will provide, free of charge, at it's sole option, replacement part(s) or product (or if no longer available, a comparable product) to replace those which have proven defective in materials or workmanship.
Proof of purchase (original sales receipt) from the original consumer purchaser must be made available to JADO for all limited warranty claims. This limited warranty is non transferable. It does not apply in the event of product damage due to the use of other than genuine JADO replacement parts, installation error, abuse, misuse, or improper care and maintenance (whether performed by a plumber, contractor, service provider or member of the purchaser's household). The limited warranty excludes damage due to aggressive air or water conditions, or harsh or abrasive cleaners and/or materials. This limited warranty excludes all industrial, commercial and business usage, whose purchasers are hereby extended a two year limited warranty (with the exception of solenoid valves and other electronic components which carry a one year limited warranty) applying to all other terms of this limited warranty except duration. This limited warranty does not cover labor charges incurred and/or damages sustained in installation, repair or replacement, nor incidental or consequential damages, all of which are expressly disclaimed. This limited warranty is applicable only to JADO faucets manufactured after June 1, 1996 and installed in the United States and/or Canada.
This limited warranty gives the original consumer purchaser of an JADO faucet specific legal rights which may vary from state to state or from province to province. This limited warranty does not cover any liability for consequential or incidental damages, all of which are hereby expressly disclaimed, or the extension beyond the duration of this limited warranty of any implied limited warranties, including those of merchantability or fitness for an intended purpose. In some states or provinces the exclusion or limitation of incidental or consequential damages is not allowed, so those exclusions may not apply to you.

POLISHED BRASS AND CUSTOM FINISH WARRANTY: A 1 YEAR LIMITED FINISH WARRANTY from date of purchase is provided to the first residential owner against defects in materials and workmanship. Due to the ever-changing finish of Patina products, the finish warranty is excluded. Warranty shall not include problems related to the installation of the product.

MECHANICS
MECHANICAL WARRANTY: A LIFETIME LIMITED WARRANTY is provided to the first residential owner on parts to be free from failure related to defects in materials and workmanship but not installation.

CONDITIONS TO WARRANTIES
JADO Bathroom & Hardware Manufacturing Corp. places the following conditions on its finish and mechanical warranties to the first residential owner only.
JADO finish and mechanical warranties are limited to products correctly installed and used in a residential environment.
JADO warranties will not assume liability for damage due to abuse, mishandling, incorrect installation, improper maintenance, or deterioration due to normal use.
JADO will not be liable for labor or other costs relating to the sale, installation, or replacement of their products.
In the event of a defect in any JADO product covered by this warranty, the product must be returned to the dealer where originally purchased along with proof of purchase.
JADO's obligation under the warranty shall be limited to the repair or exchange of any product which has been determined by JADO to be defective after appropriate examination.

JADO

Products

BØRMA by JADO™
Product Numbers

Towel Ring
014/200/...

Towel Bar 18"
014/460/...
Towel Bar 24"
014/600/...
Towel Bar 30"
014/800/...

Spare Tissue Holder
014/160/...

Shelf
014/612/...

JADO USA
7845 East Paradise Lane
Scottsdale, AZ 85260
Phone:(800) 227-2734
Fax: (800) 552-JADO(5236)
www.jadousa.com

Wall Mounted Accessories:

Towel Ring, Towel Bar, Spare Tissue Holder, Shelf

Installation Instructions

To ensure that your installation proceeds smoothly--please read these instructions carefully before you begin.

Luxury Faucets and Accessories



©JADO USA 2003

109652A

TOOLS REQUIRED

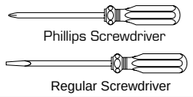

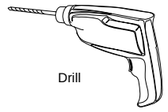





ROUGHING-IN DIMENSIONS

Spare Tissue Holder

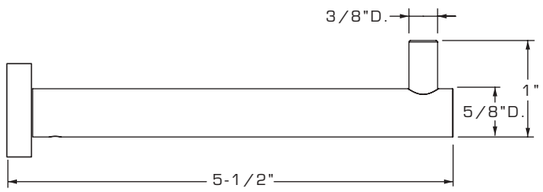

Towel Ring

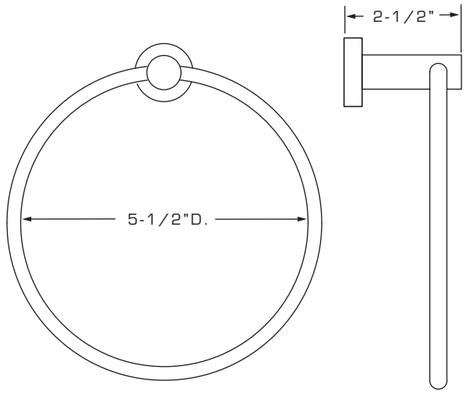

Shelf

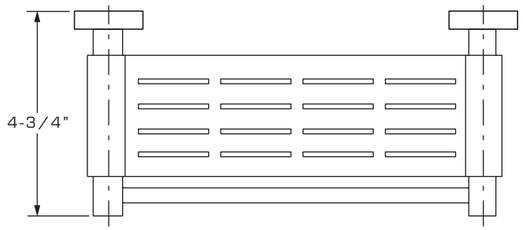

Towel Bar

014/460 (18")
014/600 (24")
014/800 (30")

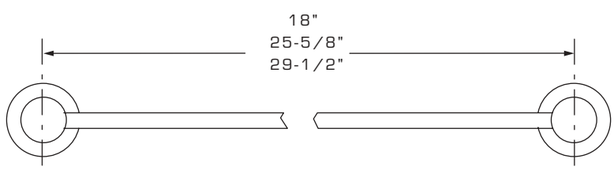

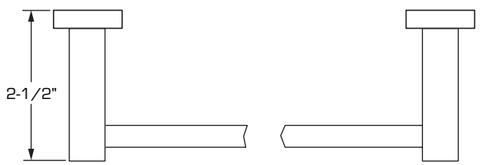

109652A

1 INSTALL WALL BRACKET

- The wall mounted accessories work best if secured to a wall stud or cross brace within the wall, using the SCREWS (1) supplied.
- If the wall mounted accessories are to be installed on a tile or plaster wall the ANCHORS (3) and SCREWS (1) should be used.
- Determine desired height and location (optional) and mark a center line. Using the MOUNTING POST (2) as a template mark the spot for the ANCHOR (3). If MOUNTING POST (2) is secured to a stud or cross brace drill small pilot hole for SCREW (1).
- ***For installations on drywall or tiled walls:*** Use ANCHOR (3) and SCREW (1) for securing MOUNTING POST (2) to finished wall. Drill a 1/4" dia. hole a minimum of 1-3/4" deep. Insert the ANCHOR (3) flush with face of the finished wall.
- Secure MOUNTING POST (2) to wall with SCREWS (1).

2 INSTALL ACCESSORY (Spare Tissue Holder and Towel Ring)

- Install ESCUTCHEON (4) onto WALL MOUNTED ACCESSORY.
- Install WALL MOUNTED ACCESSORY with ESCUTCHEON (4) onto installed MOUNTING POST (2). Push WALL MOUNTED ACCESSORY flush against MOUNTING POST (2) and tighten SET SCREW (5) with HEX WRENCH (6) suppied to secure to wall.
- Push ESCUTCHEON (4) against finished wall.

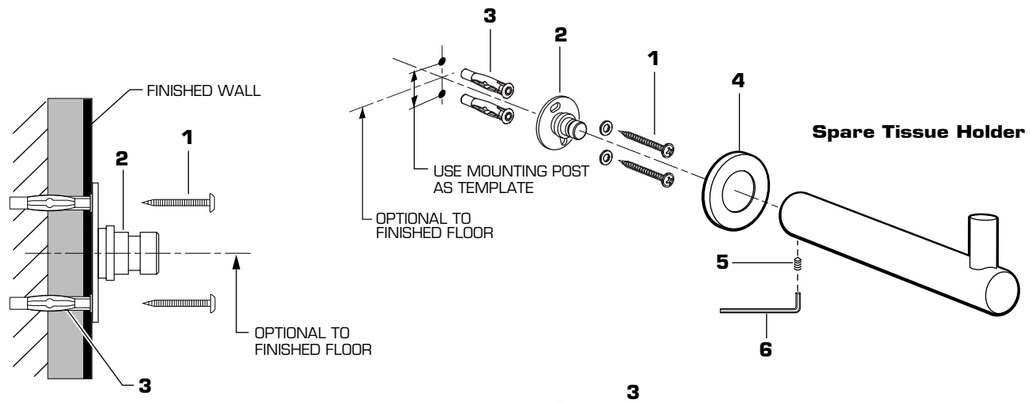

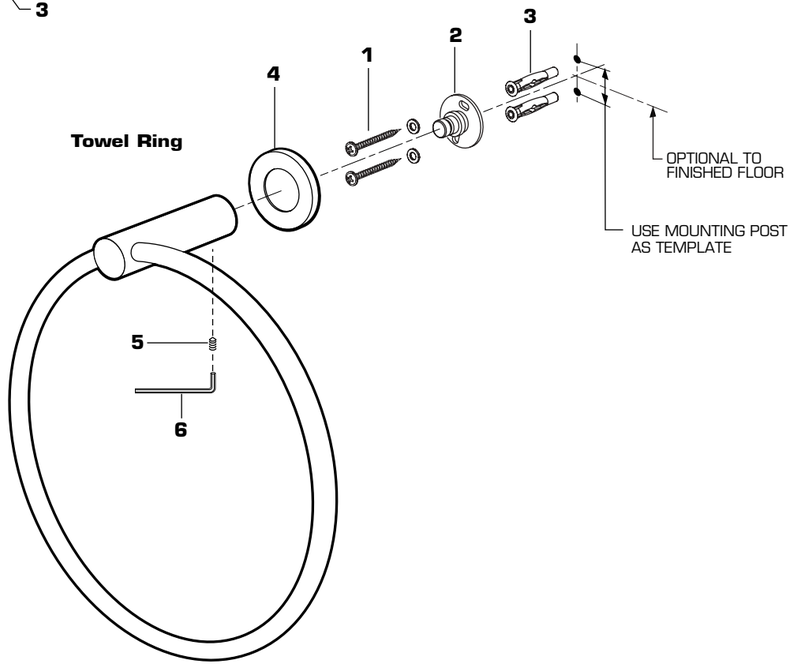

109652A