4 TEST INSTALLED HAND SHOWER

- Lift HAND SHOWER (1) from HOLDER (2) and direct spray into tub. Turn hand shower valve on to check HAND SHOWER (1) for proper operation and hose connections for leaks. ➡

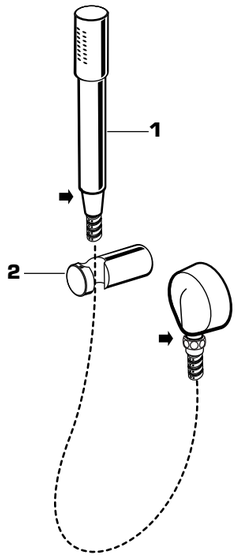

5 HELPFUL HINTS FOR CLEANING AND MAINTENANCE

The solid brass product you have just purchased has been designed to give you years of beauty and service. It is important to bring to your attention proper care and maintenance procedures, which will ensure its lasting beauty.

- First and foremost, it is important (as it is with any fine piece of jewelry or furniture) that the product be wiped clean and dry with a soft damp cloth after every use.
- Second, under no circumstances should an abrasive cleaner or combination cleaner/polish be used on JADO products. The abrasive nature of such products will eventually destroy the finish and void the warranty.
- In the event of stubborn blemishes shown on the finish, we recommend use of Windex window cleaner with a soft cloth, but we do not recommend it be used on an everyday basis.
- It is important to note that it is normal to expect signs of usage over time.

Thank you for selecting JADO for your home.

TO THE PURCHASER OF JADO BRASS PRODUCTS

Attention installer:
Please leave This Pamphlet for The Owner

NOTICE: JADO products conform to industry requirements of water conservation under the ASTM / ANSI A112.18.1M-1994 plumbing code. Lavatory, bidet, wet bar and kitchen faucet sets have a maximum flow rate of 2.2GPM. Shower heads, hand showers and body sprays have a maximum flow rate of 2.5GPM.

The state of California has mandated under Proposition #65 that manufactures of products, including faucets which come into contact with potable water, must warn the consumer if the product contains materials listed by the state as a carcinogen or reproductive toxin. Lead, which is contained in all brass faucets in limited amounts appears on the State's list.

Preliminary industry tests have indicated that users of faucets made from brass face no significant danger, however, California Proposition #65 requires that we provide you with the following notice:

Warning: This product contains an element known to the State of California to cause cancer of reproductive harm.

JADO BATHROOM AND HARDWARE MFG. CORP.
6615 West Boston
Chandler, AZ 85226

FAUCET LIFETIME FUNCTION AND FINISH LIMITED WARRANTY

JADO Bathroom & Hardware Manufacturing Corp. provides the following warranties only to the first residential owner of our products.
FINISHES
JADO warrants this product to be free from defects in materials or workmanship for as long as the original consumer purchaser owns their home.
JADO will provide, free of charge, at it's sole option, replacement part(s) or product (or if no longer available, a comparable product) to replace those which have proven defective in materials or workmanship.
Proof of purchase (original sales receipt) from the original consumer purchaser must be made available to JADO for all limited warranty claims. This limited warranty is non transferable. It does not apply in the event of product damage due to the use of other than genuine JADO replacement parts, installation error, abuse, misuse, or improper care and maintenance (whether performed by a plumber, contractor, service provider or member of the purchaser's household). The limited warranty excludes damage due to aggressive air or water conditions, or harsh or abrasive cleaners and/or materials. This limited warranty excludes all industrial, commercial and business usage, whose purchasers are hereby extended a two year limited warranty (with the exception of solenoid valves and other electronic components which carry a one year limited warranty) applying to all other terms of this limited warranty except duration. This limited warranty does not cover labor charges incurred and/or damages sustained in installation, repair or replacement, nor incidental or consequential damages, all of which are expressly disclaimed. This limited warranty is applicable only to JADO faucets manufactured after June 1, 1996 and installed in the United States and/or Canada.
This limited warranty gives the original consumer purchaser of an JADO faucet specific legal rights which may vary from state to state or from province to province. This limited warranty does not cover any liability for consequential or incidental damages, all of which are hereby expressly disclaimed, or the extension beyond the duration of this limited warranty of any implied limited warranties, including those of merchantability or fitness for an intended purpose. In some states or provinces the exclusion or limitation of incidental or consequential damages is not allowed, so those exclusions may not apply to you.

POLISHED BRASS AND CUSTOM FINISH WARRANTY: A 1 YEAR LIMITED FINISH WARRANTY from date of purchase is provided to the first residential owner against defects in materials and workmanship. Due to the ever-changing finish of Patina products, the finish warranty is excluded. Warranty shall not include problems related to the installation of the product.

MECHANICS
MECHANICAL WARRANTY: A LIFETIME LIMITED WARRANTY is provided to the first residential owner on parts to be free from failure related to defects in materials and workmanship but not installation.

CONDITIONS TO WARRANTIES
JADO Bathroom & Hardware Manufacturing Corp. places the following conditions on its finish and mechanical warranties to the first residential owner only.
JADO finish and mechanical warranties are limited to products correctly installed and used in a residential environment.
JADO warranties will not assume liability for damage due to abuse, mishandling, incorrect installation, improper maintenance, or deterioration due to normal use.
JADO will not be liable for labor or other costs relating to the sale, installation, or replacement of their products.
In the event of a defect in any JADO product covered by this warranty, the product must be returned to the dealer where originally purchased along with proof of purchase.
JADO's obligation under the warranty shall be limited to the repair or exchange of any product which has been determined by JADO to be defective after appropriate examination.

JADO

Products

BØRMA by JADO™

Product Number
814/999/...

Complete Personal Hand Shower Set
Installation Instructions

To ensure that your installation proceeds smoothly--please read these instructions carefully before you begin.

Luxury Faucets and Accessories



JADO USA
6615 West Boston
Chandler, AZ 85226
Phone:(800) 227-2734
Fax: (800) 552-JADO(5236)
www.jadousa.com

©JADO USA 2003

109643A

TOOLS REQUIRED

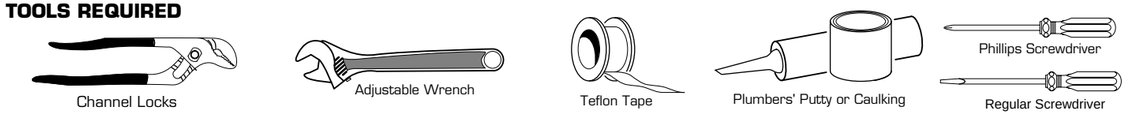

ROUGHING-IN DIMENSIONS

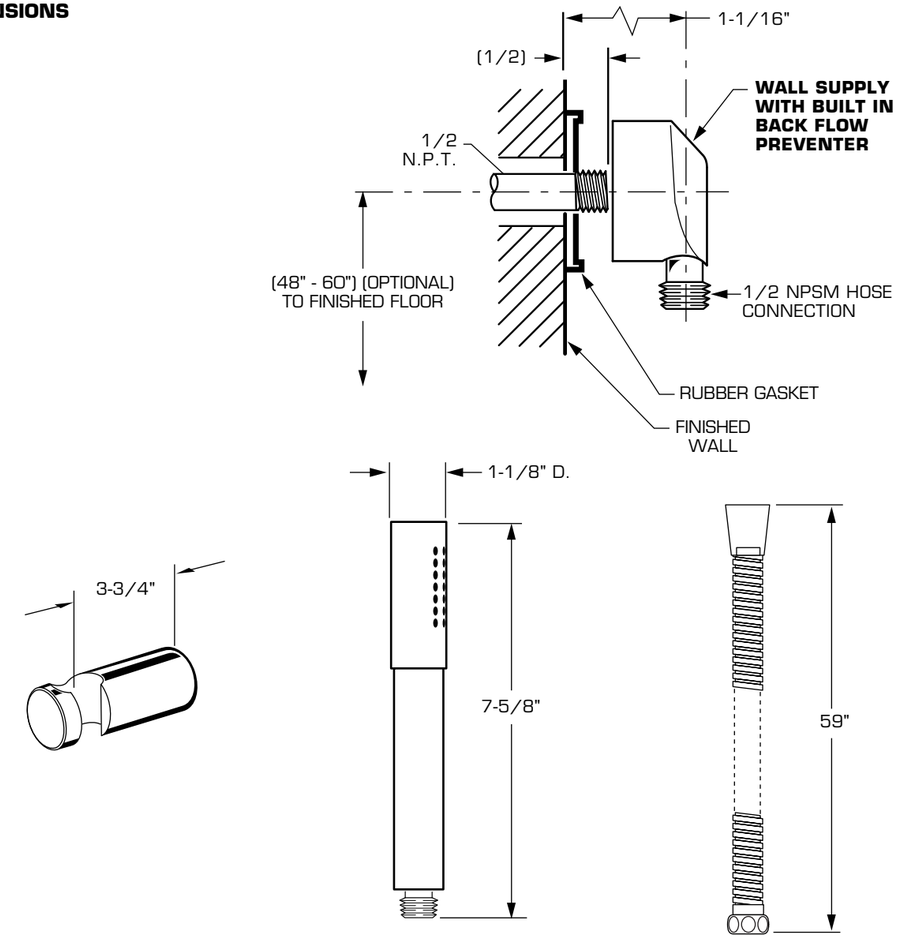

1 INSTALL WALL SUPPLY

CAUTION **Turn off hot and cold water supplies before beginning.**

- Supply to WALL SUPPLY (1) is 1/2" NPT. See rough-in above for detailed information.
- Install RUBBER SEAL (2) onto WALL SUPPLY (1).
- Apply sealant or teflon tape to threads of 1/2" NPT supply nipple. Thread WALL SUPPLY (1) onto supply nipple making a water tight seal. WALL SUPPLY (1) with RUBBER SEAL (2) should be tight against finished wall.

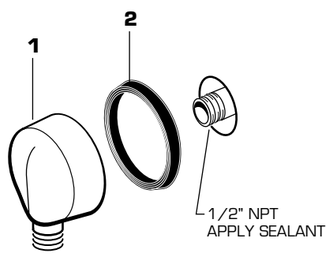

109643A

2 INSTALL HAND SHOWER HOLDER

- The SHOWER HOLDER (1) works best if secured to a wall stud or cross brace within the wall, using the SCREW (2) supplied.
- If the SHOWER HOLDER (1) is to be installed on a tile or plaster wall, the ANCHOR (3) and SCREW (2) should be used.
- Determine desired height and location (optional) and mark a center line. If MOUNTING SUPPORT (4) is secured to a stud or cross brace drill small pilot hole for SCREW (2).
- ***For installations on drywall or tiled walls:*** Use ANCHOR (3) and SCREW (2) for securing MOUNTING SUPPORT (4) to finished wall. Drill a 1/4" dia. hole a minimum of 1-3/4" deep. Insert the the ANCHOR (3) flush with face of the finished wall.
- Install RUBBER WASHER (5) in recess of MOUNTING SUPPORT (4). Secure MOUNTING SUPPORT (4) to wall with SCREW (2).
- Install SHOWER HOLDER (1) onto installed MOUNTING SUPPORT (4). Push SHOWER HOLDER (1) flush against finished wall and tighten SET SCREW (5) with (2.5mm) HEX WRENCH (7) supplied, to secure SHOWER HOLDER (1) to wall.

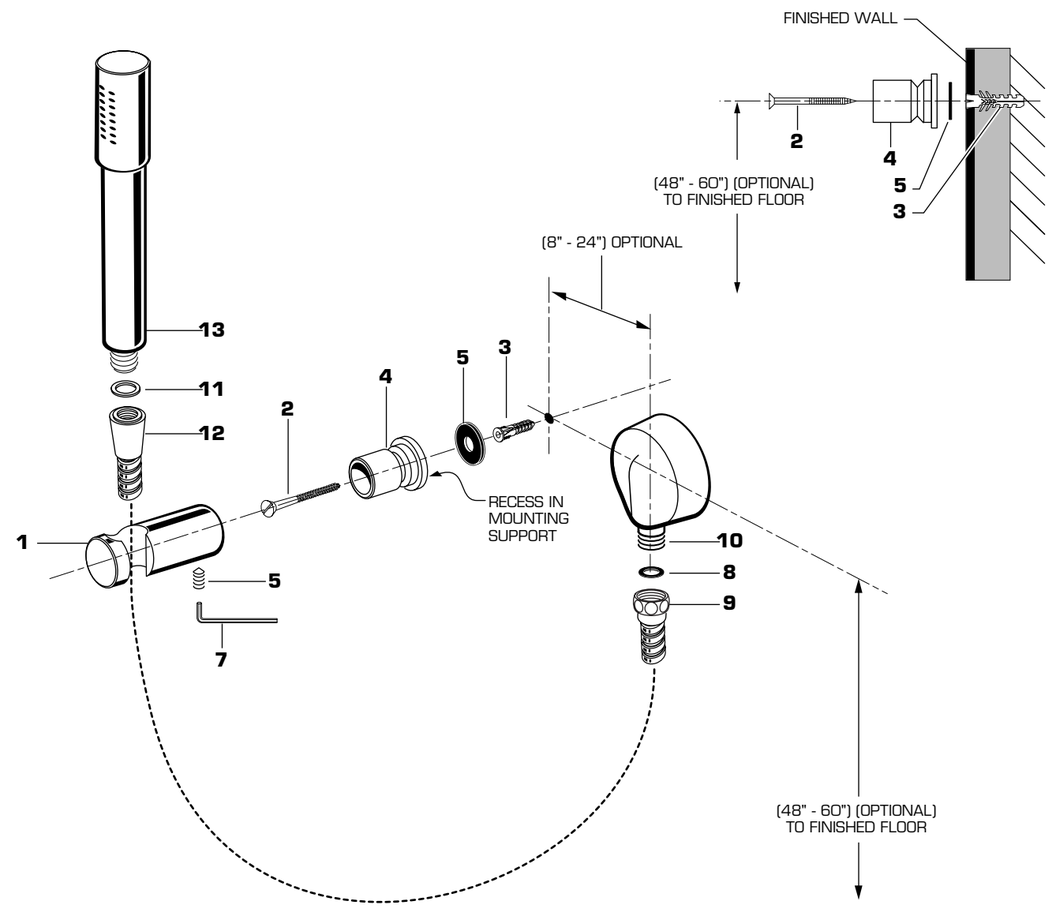

3 INSTALL HOSE AND HAND SHOWER

- Install SEAL (8) into COUPLING NUT (9). Connect COUPLING NUT (9) to WALL SUPPLY NIPPLE (10) and tighten.
- INSTALL second SEAL (11) into SPRAY HOSE END (12) and connect HAND SHOWER (13) to SPRAY HOSE END (12). Hand tighten.

109643A