## 3 HELPFUL HINTS FOR CLEANING AND MAINTENANCE

***The solid brass product you have just purchased has been designed to give you years of beauty and service. It is important to bring to your attention proper care and maintenance procedures, which will ensure its lasting beauty.***

- First and foremost, it is important (as it is with any fine piece of jewelry or furniture) that the product be wiped clean and dry with a soft damp cloth after every use.
- Second, under no circumstances should an abrasive cleaner or combination cleaner/polish be used on JADO products. The abrasive nature of such products will eventually destroy the finish and void the warranty.
- In the event of stubborn blemishes shown on the finish, we recommend use of Windex window cleaner with a soft cloth, but we do not recommend it be used on an everyday basis.
- It is important to note that it is normal to expect signs of usage over time.

**Thank you for selecting JADO for your home.**

### TO THE PURCHASER OF JADO BRASS PRODUCTS

**Attention installer:**
*Please leave This Pamphlet for The Owner*

**NOTICE: JADO products conform to industry requirements of water conservation under the ASTM / ANSI A112.18.1M-1994 plumbing code. Lavatory, bidet, wet bar and kitchen faucet sets have a maximum flow rate of 2.2GPM. Shower heads, hand showers and body sprays have a maximum flow rate of 2.5GPM.**

The state of California has mandated under Proposition #65 that manufactures of products, including faucets which come into contact with potable water, must warn the consumer if the product contains materials listed by the state as a carcinogen or reproductive toxin. Lead, which is contained in all brass faucets in limited amounts appears on the State's list.

Preliminary industry tests have indicated that users of faucets made from brass face no significant danger, however, California Proposition #65 requires that we provide you with the following notice:

Warning: This product contains an element known to the State of California to cause cancer of reproductive harm.

JADO BATHROOM AND HARDWARE MFG. CORP.
6615 West Boston
Chandler, AZ 85226

### FAUCET LIFETIME FUNCTION AND FINISH LIMITED WARRANTY

**JADO Bathroom & Hardware Manufacturing Corp. provides the following warranties only to the first residential owner of our products.**
**FINISHES**
JADO warrants this product to be free from defects in materials or workmanship for as long as the original consumer purchaser owns their home.
JADO will provide, free of charge, at it's sole option, replacement part(s) or product (or if no longer available, a comparable product) to replace those which have proven defective in materials or workmanship.
Proof of purchase (original sales receipt) from the original consumer purchaser must be made available to JADO for all limited warranty claims. This limited warranty is non transferable. It does not apply in the event of product damage due to the use of other than genuine JADO replacement parts, installation error, abuse, misuse, or improper care and maintenance (whether performed by a plumber, contractor, service provider or member of the purchaser's household). The limited warranty excludes damage due to aggressive air or water conditions, or harsh or abrasive cleaners and/or materials. This limited warranty excludes all industrial, commercial and business usage, whose purchasers are hereby extended a two year limited warranty (with the exception of solenoid valves and other electronic components which carry a one year limited warranty) applying to all other terms of this limited warranty except duration. This limited warranty does not cover labor charges incurred and/or damages sustained in installation, repair or replacement, nor incidental or consequential damages, all of which are expressly disclaimed. This limited warranty is applicable only to JADO faucets manufactured after June 1, 1996 and installed in the United States and/or Canada.
This limited warranty gives the original consumer purchaser of an JADO faucet specific legal rights which may vary from state to state or from province to province. This limited warranty does not cover any liability for consequential or incidental damages, all of which are hereby expressly disclaimed, or the extension beyond the duration of this limited warranty of any implied limited warranties, including those of merchantability or fitness for an intended purpose. In some states or provinces the exclusion or limitation of incidental or consequential damages is not allowed, so those exclusions may not apply to you.

**POLISHED BRASS AND CUSTOM FINISH WARRANTY**: A 1 YEAR LIMITED FINISH WARRANTY from date of purchase is provided to the first residential owner against defects in materials and workmanship. Due to the ever-changing finish of Patina products, the finish warranty is excluded. Warranty shall not include problems related to the installation of the product.

**MECHANICS**
**MECHANICAL WARRANTY:** A LIFETIME LIMITED WARRANTY is provided to the first residential owner on parts to be free from failure related to defects in materials and workmanship but not installation.

**CONDITIONS TO WARRANTIES**
JADO Bathroom & Hardware Manufacturing Corp. places the following conditions on its finish and mechanical warranties to the first residential owner only.
JADO finish and mechanical warranties are limited to products correctly installed and used in a residential environment.
JADO warranties will not assume liability for damage due to abuse, mishandling, incorrect installation, improper maintenance, or deterioration due to normal use.
JADO will not be liable for labor or other costs relating to the sale, installation, or replacement of their products.
In the event of a defect in any JADO product covered by this warranty, the product must be returned to the dealer where originally purchased along with proof of purchase.
JADO's obligation under the warranty shall be limited to the repair or exchange of any product which has been determined by JADO to be defective after appropriate examination.



JADO

Products

**IQ™**

**Product Numbers**

Robe Hook
032/010/...

Tissue Holder
032/145/...

Spare Tissue Holder
032/160/...

Tumbler
032/141/...

Soap Dish
032/132/...

Lotion Dispenser
032/144/...

JADO USA
6615 West Boston
Chandler, AZ 85226
Phone:(800) 227-2734
Fax: (800) 552-JADO(5236)
www.jadousa.com

# Wall Mounted Accessories:

## Robe Hook, Tissue Holder, Spare Tissue holder, Tumbler, Soap Dish and Lotion Dispenser

# Installation Instructions

**To ensure that your installation proceeds smoothly--please read these instructions carefully before you begin.**

Luxury Faucets and Accessories



©JADO USA 2005

H965592

## TOOLS REQUIRED




**ROUGHING-IN DIMENSIONS**

### SPARE TISSUE HOLDER

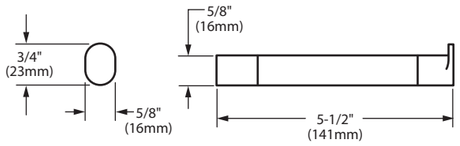


### TISSUE HOLDER

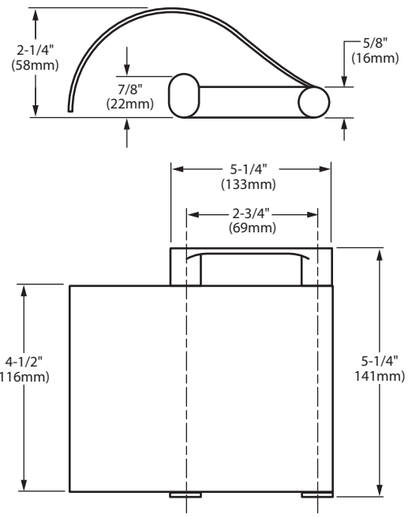


### TUMBLER

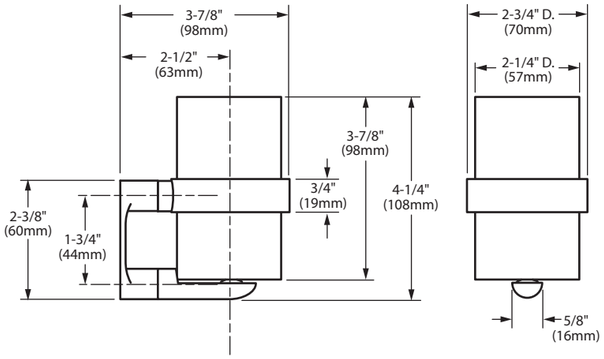


### SOAP DISH

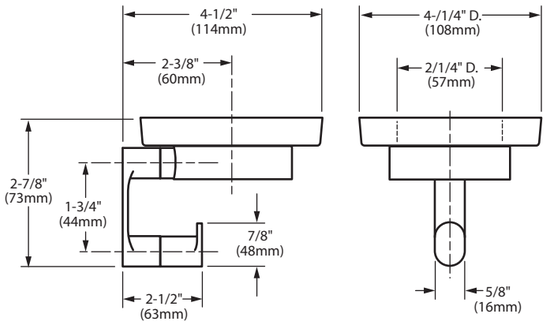


### LOTION DISPENSER

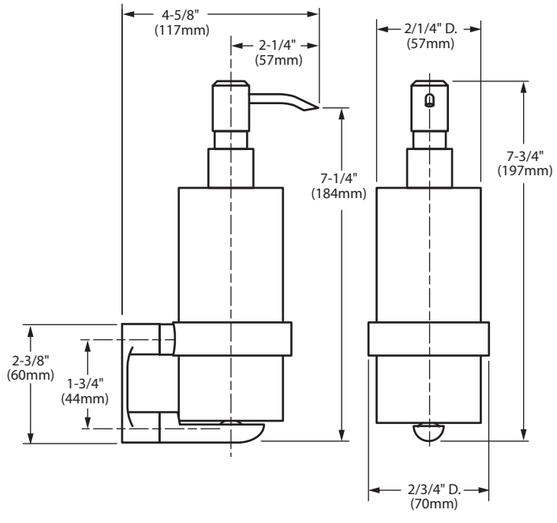


### ROBE HOOK

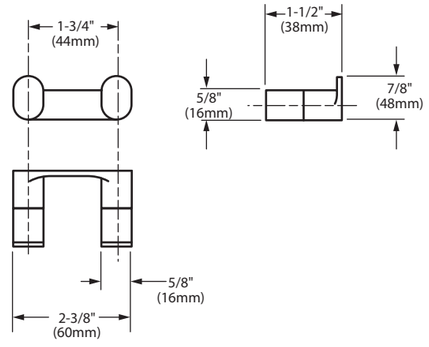


H965592

## 1 INSTALL WALL BRACKET (ALL ACCESSORIES)

- The wall mounted accessories work best if secured to a wall stud or cross brace within the wall, using the SCREW (1) supplied.
- If the wall mounted accessories are to be installed on a tile or plaster wall the ANCHOR (2) and SCREW (1) should be used.
- Determine desired height and location (optional) and mark a center line. Use the MOUNTING TEMPLATE (3) supplied. Peel the backing off the TEMPLATE (3) and press TEMPLATE (3) onto the mounting surface. Find the correct mounting holes for the accessory you are mounting. *The porduct number of the accessory is marked on the TEMPLATE (3). Make sure center line is level.* Mark the spots for the ANCHORS (2). If MOUNTING POST (4) is secured to a stud or cross brace, drill small pilot holes for SCREWS (1). Remove TEMPLATE (3) after drilling the two mounting holes.
- ***For installations on drywall or tiled walls:*** Use ANCHORS (2) and SCREWS (1) for securing MOUNTING POST (4) to finished wall. Drill a 1/4" dia. hole a minimum of 1-3/4" deep. Insert the ANCHOR (2) flush with face of the finished wall.
- Secure MOUNTING POST (4) to wall with SCREWS (1).

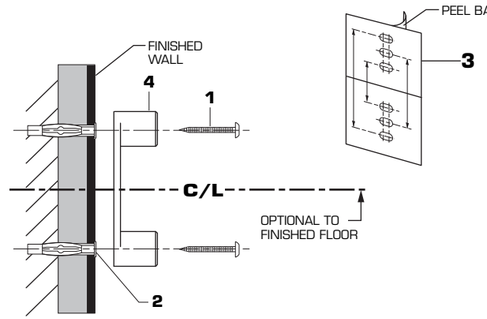


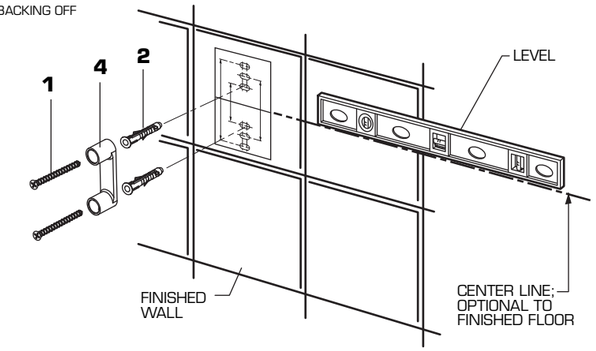


## 2 INSTALL ACCESSORY

- Install WALL MOUNTED ACCESSORY into installed MOUNTING POST (1). Tighten SET SCREWS (2) with HEX WRENCH (3) supplied to secure accessory to wall.
- All accessories shown are installed in the same way. Install soap dish, soap dispenser, and tumbler to complete installation on these accessories.

### SOAP DISH

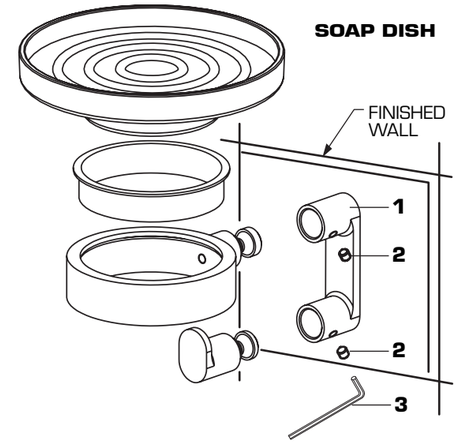


### LOTION DISPENSER

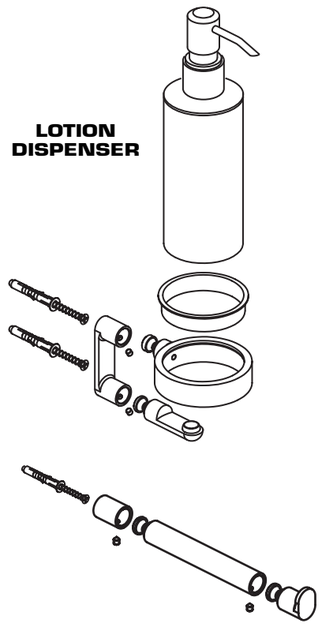

### ROBE HOOK

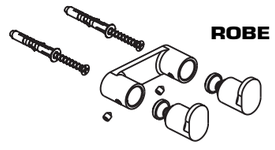

### TUMBLER

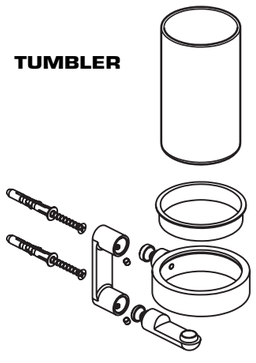

### SPARE TISSUE HOLDER



### TISSUE HOLDER

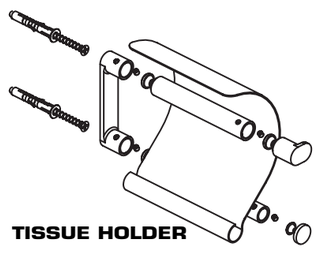

H965592