Børma by JADO™

Towel Bar

014/460/… 014/600/… 014/800/…

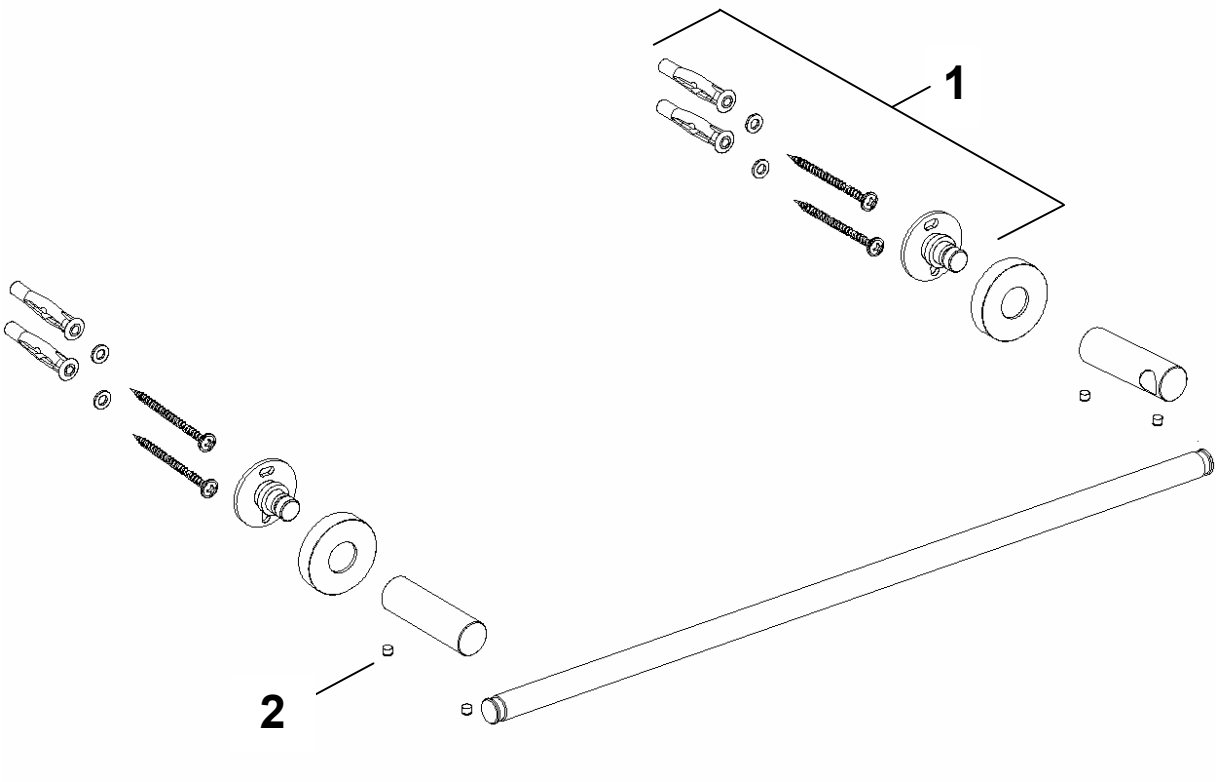

Pos.	Part No.	Description
1	013/600/632/999	Mounting kit
2	013/600/647/999	Set screw

04.12.2003