IQ™
3-Hole Bidet Set with Vacuum Breaker
832/144/...

JADO

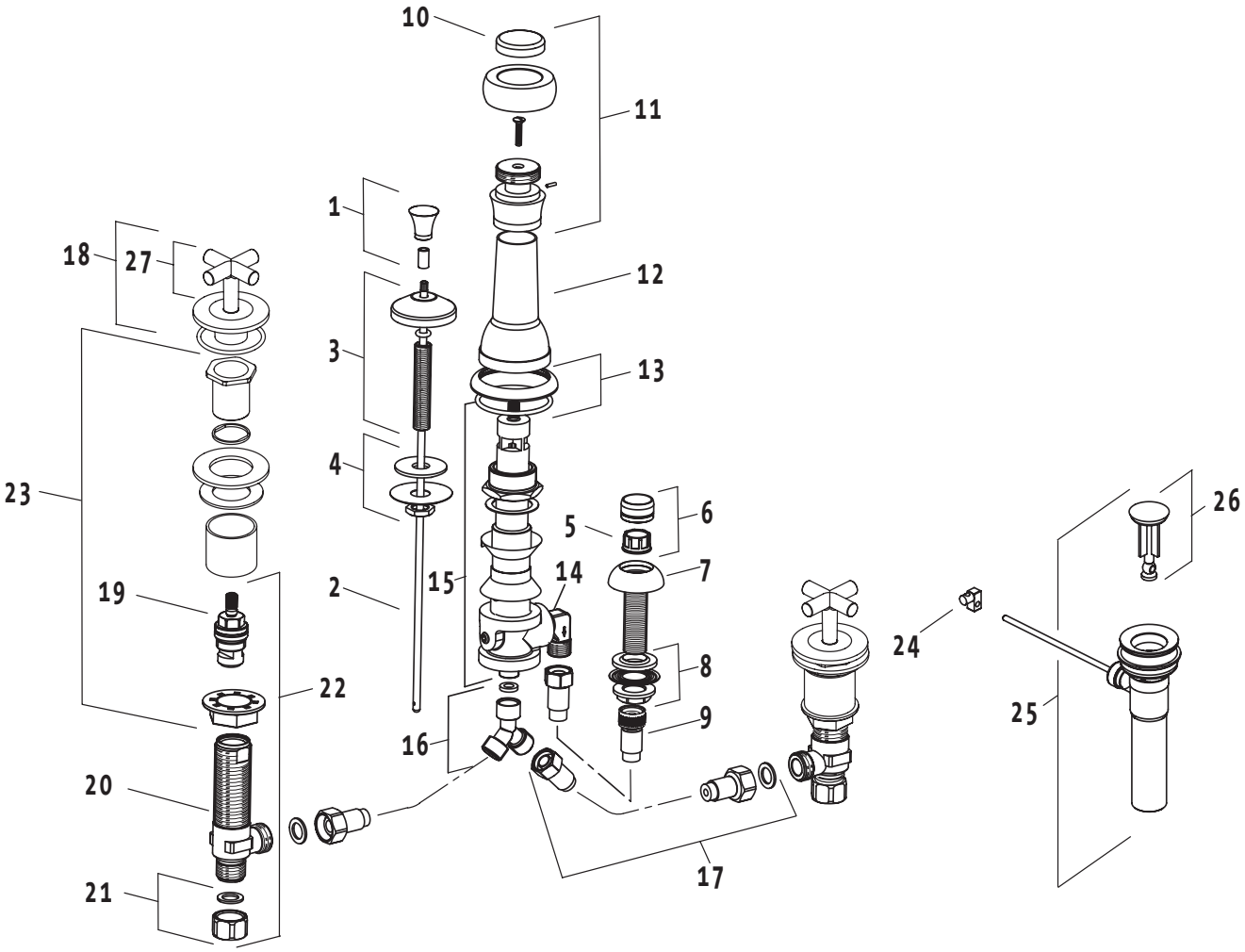

Replace "XXX" with the appropriate finish code:
Polished Chrome = 100, Ultra Steel = 355

Example Repair Part order:
H961688.100 in Polished Chrome
H961688.355 in Ultra Steel

Pos.	Description	**Repair Part Number**	Delivery quantity	Pos.	Description	**Repair Part Number**	Delivery quantity
1	Pop-up Knob	H960850.XXX	1 Piece	17	Flex Hose	H961250.191	1 Piece
2	Pop-up Rod	H960851.XXX	1 Piece	18	Cross Handle Set	H960843.XXX	1 Set
3	Rosette	H961243.XXX	1 Piece	19	1/2" Cartridge (Counterclockwise on)	H960104.191	1 Piece
4	Mounting Kit	H961244.191	1 Set				
5	Aerator	H960909.191	1 Piece	20	1/2" Side Valve Body	H960125.191	1 Piece
6	Aerator Assembly	H960568.XXX	1 Set	21	Supply Nut	H960581.191	1 Piece
7	Spray Body	H961247.XXX	1 Piece	22	1/2" Side Valve Rough (Counterclockwise on)	H961283.191	1 Piece
8	Mounting Kit	H961248.191	1 Set				
9	Flex Hose	H961249.191	1 Piece	23	Mounting Kit	H961260.191	1 Piece
10	Diverter Handle Cap	H960544.XXX	1 Piece	24	Pop-up Rod Swivel	H960103.191	1 Piece
11	Diverter Handle	H960852.XXX	1 Set	25	Pop-up Drain Assembly	874014.XXX	1 Piece
12	Diverter Cover	H961252.XXX	1 Piece	26	Drain Stopper	H960097.XXX	1 Piece
13	Rosette	H961251.XXX	1 Piece	27	Cross Handle Only	H961704.XXX	1 Piece
14	Hose Adapter	H961253.191	1 Piece				
15	Diverter/Vaccuum Breaker	H961256.191	1 Piece				
16	Y-Adapter	H961254.191	1 Piece				