Børma by JADO™

Towel Ring

014/200/...

JADO

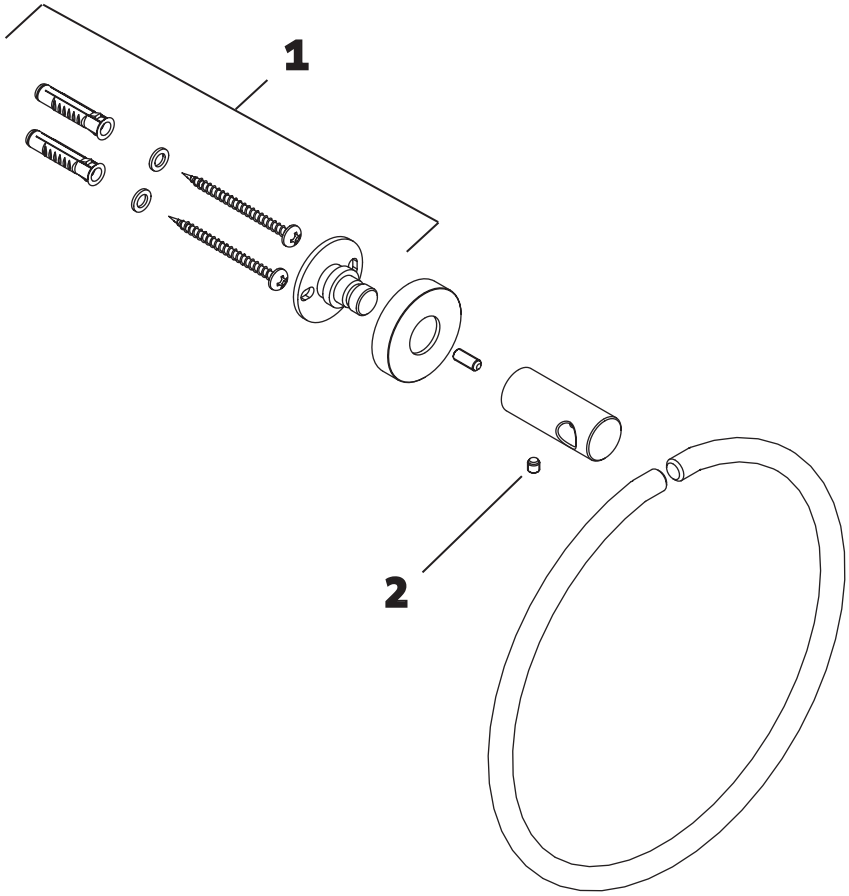

Replace "XXX" with the appropriate finish code:
Polished Chrome = 100,

Example Repair Part order:

Pos.	Description	**Repair Part Number**	Delivery quantity	Pos.	Description	**Repair Part Number**	Delivery quantity
1	Mounting Bracket	H961648.191	1 Piece				
2	Set Screw	H961646.191	1 Piece				