# IQ™
## Spare Tissue Holder
**032/160/...**

JADO

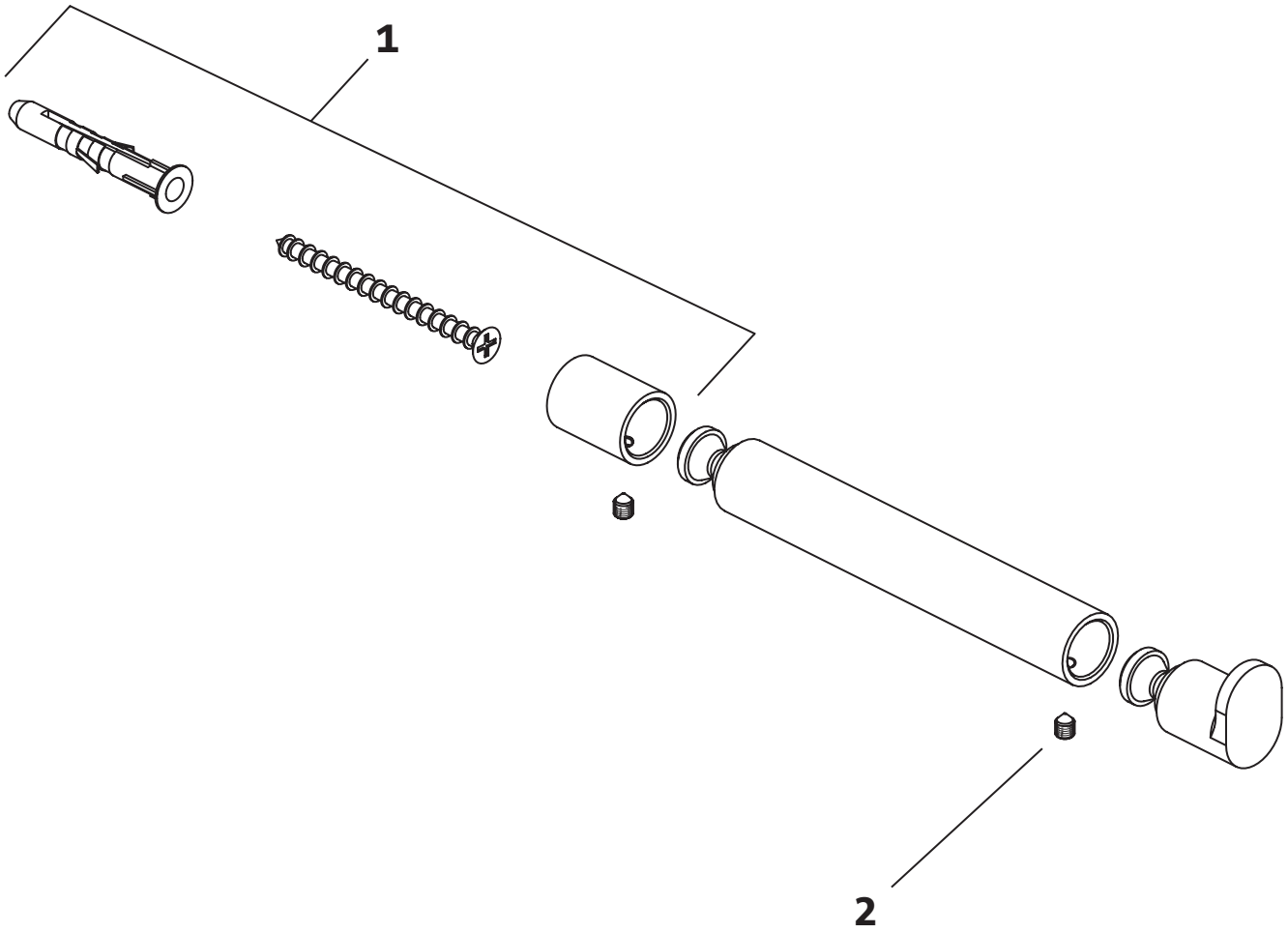


**Replace "XXX" with the appropriate finish code:**
Polished Chrome = 100, Ultra Steel = 355

**Example Repair Part order:**
H961714.100 in Polished Chrome
H961714.355 in Ultra Steel

| Pos. | Description | **Repair Part Number** | Delivery quantity |
|---|---|---|---|
| 1 | Mounting Bracket | H961714.XXX | 1 Piece |
| 2 | Set Screw | H961646.191 | 1 Piece |