IQ™
Tumbler
032/141/...

JADO

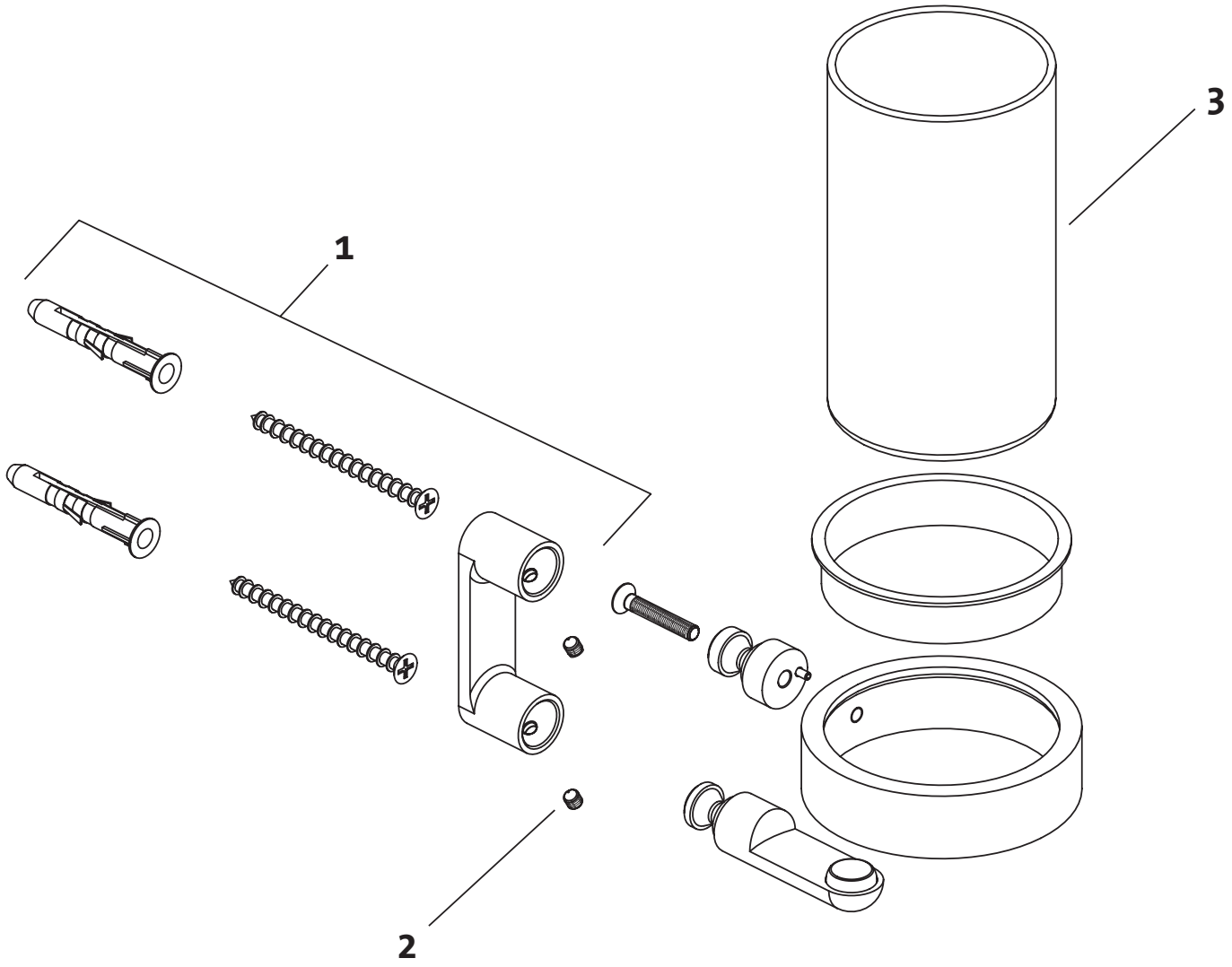

Replace "XXX" with the appropriate finish code:
Polished Chrome = 100, Ultra Steel = 355

Example Repair Part order:
H961712.100 in Polished Chrome
H961712.355 in Ultra Steel

Pos.	Description	**Repair Part Number**	Delivery quantity
1	Mounting Bracket	H961712.XXX	1 Piece
2	Set Screw	H961646.191	1 Piece
3	Glass Tumbler	H960035.191	1 Piece