IQ™
Single Lever Kitchen Faucet
832/800/...

JADO

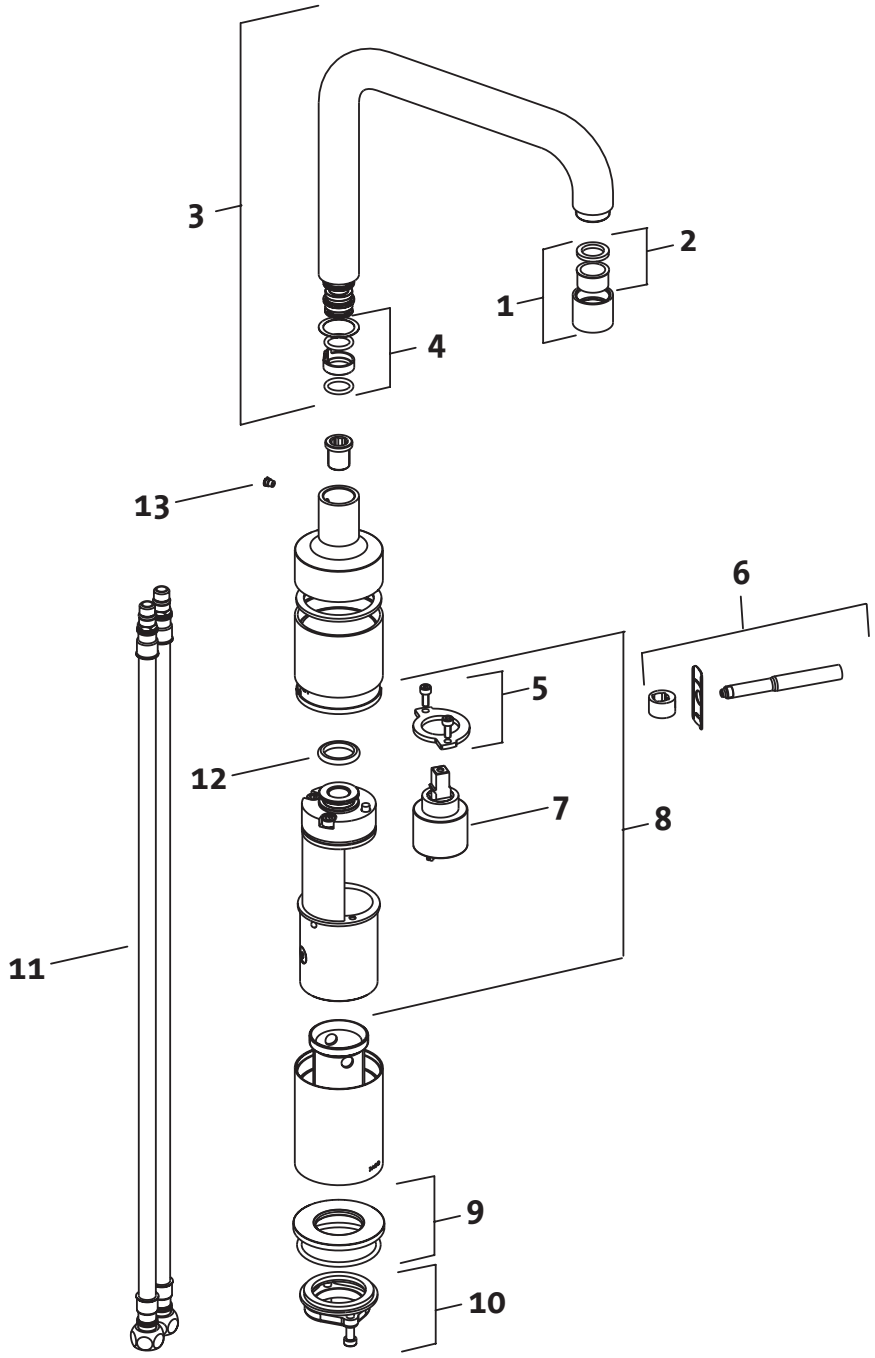

Replace "XXX" with the appropriate finish code:
Polished Chrome = 100, Ultra Steel = 355

Example Repair Part order:
H962209.100 in Polished Chrome
H962209.355 in Ultra Steel

Pos.	Description	**Repair Part Number**	Delivery quantity	Pos.	Description	**Repair Part Number**	Delivery quantity
1	Aerator Assembly	H962209.XXX	1 Set	7	Lever Cartridge	A960567.191	1 Piece
2	Aerator	H961707.191	1 Piece	8	Body Assembly	H962172.191	1 Set
3	Spout Assembly	H962208.XXX	1 Set	9	Rosette	H962173.XXX	1 Piece
4	O-Ring Set	A963044.191	1Set	10	Mounting Kit	A960263.191	1 Set
5	Mounting Kit	H962170.191	1 Piece	11	Flex Hose	H962210.XXX	1 Piece
6	Lever Handle	H962171.XXX	1 Piece	12	O-Ring	H962175.191	1 Piece
				13	Set Screw	A960058.191	1 Piece

Revision 03/22/2006