IQ™
Single Lever Semi-Professional Kitchen Faucet
832/870/...

JADO

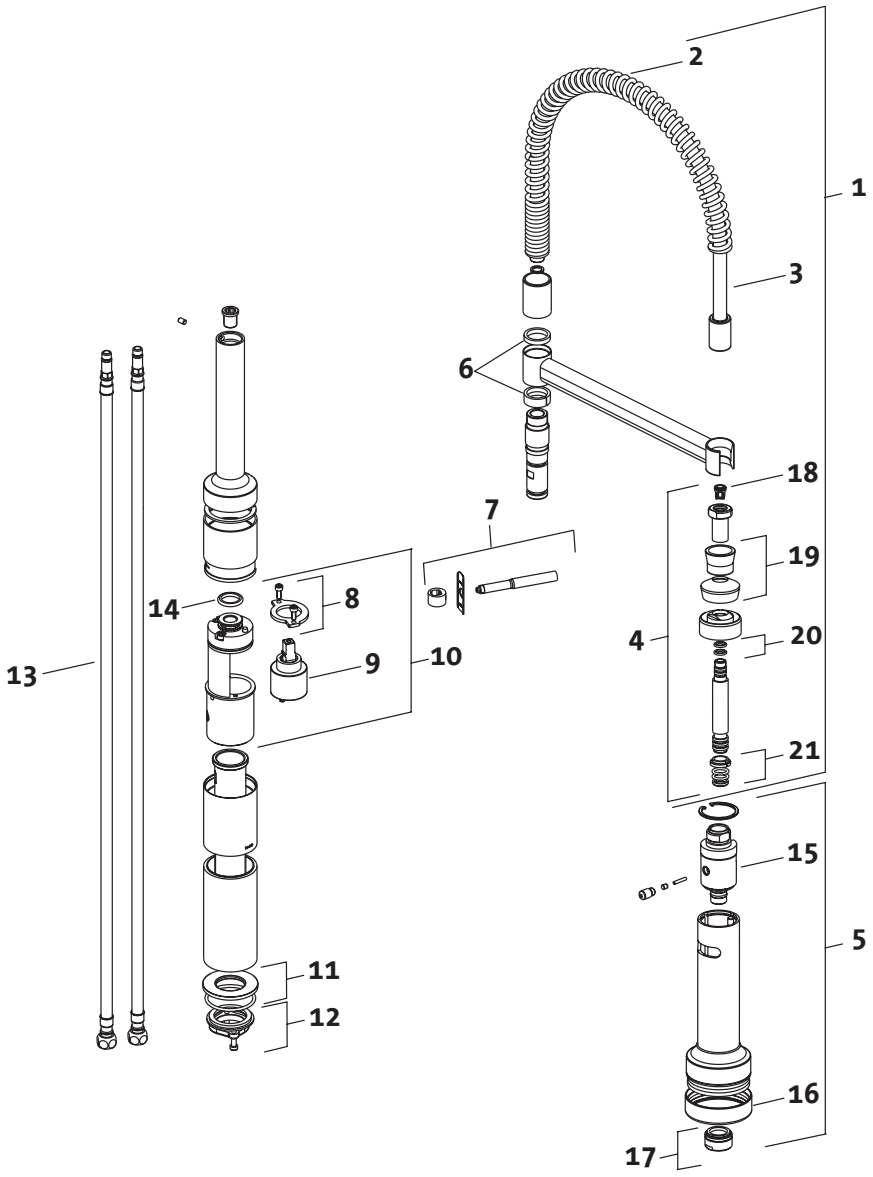

Replace "XXX" with the appropriate finish code:
Polished Chrome = 100, Ultra Steel = 355

Example Repair Part order:
H962215.100 in Polished Chrome
H962215.355 in Ultra Steel

Pos.	Description	**Repair Part Number**	Delivery quantity	Pos.	Description	**Repair Part Number**	Delivery quantity
1	Spout Assembly	H962215.XXX	1 Set	13	Flex Hose	H962218.191	1 Piece
2	Spring	H962183.XXX	1 Piece	14	O-Ring	H962175.191	1 Piece
3	Spray Hose	H962216.191	1 Piece	15	Valve Set	H962189.191	1 Piece
4	Tourning Connector	H962185.XXX	1Set	16	Rubber Protection	H962190.191	1 Piece
5	Hand Spray	H962217.XXX	1 Piece	17	Aerator Assembly	H962219.XXX	1 Set
6	Plastic Guide	H962187.191	1 Set	18	Check Valve	H962192.191	1 Piece
7	Lever Handle	H962171.XXX	1 Piece	19	Rubber Protection	H962193.191	1 Piece
8	Mounting Kit	H962170.191	1 Set	20	O-Ring Set	H962194.191	1 Set
9	Lever Cartridge	A960567.191	1 Piece	21	Plactic Guide	H962195.191	1 Set
10	Body Assembly	H962172.191	1 Set				
11	Rosette	H962173.XXX	1 Piece				
12	Mounting Kit	A960263.191	1 Set				