

Features:
- Solid Brass Construction
- Concealed Mounting
- Clear Tempered Glass

	Product Number
Glass Shelf - 17-5/8"	032/612

Available Finishes:	Finish Code
Polished Chrome	100
UltraSteel (PVD)	355

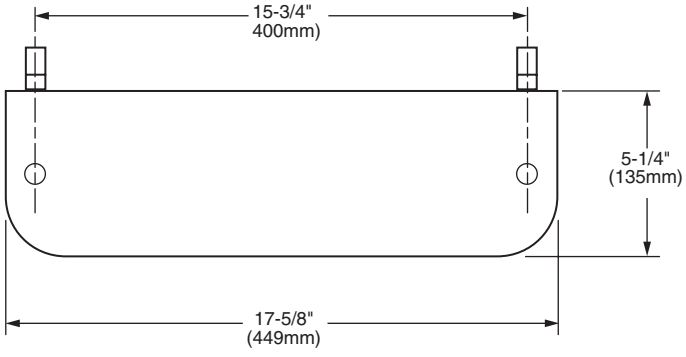

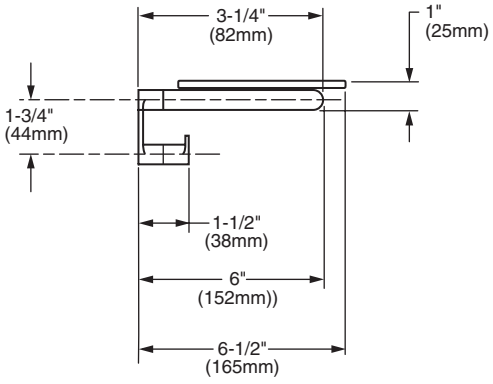

IMPORTANT: These measurements are subject to change or cancellation. No responsibility is assumed for use of superseded or voided pages.

© 2008 JADO, Inc.