

Features:

- Ceramic disc valve cartridge
- Cast brass construction
- Integral vacuum breaker with transfer valve
- Diverter controls water flow between douche spray and flushing rim
- Douche spray has built-in spray height adjustment
- Flexible Hose Connections for 8" - 12" installations
- Includes 1-1/4" drain assembly

	Handle Type	Product Number
3 - Hole Bidet Faucet	Cross	832/144

Available Finishes:	Finish Code
Polished Chrome	100
UltraSteel (PVD)	355

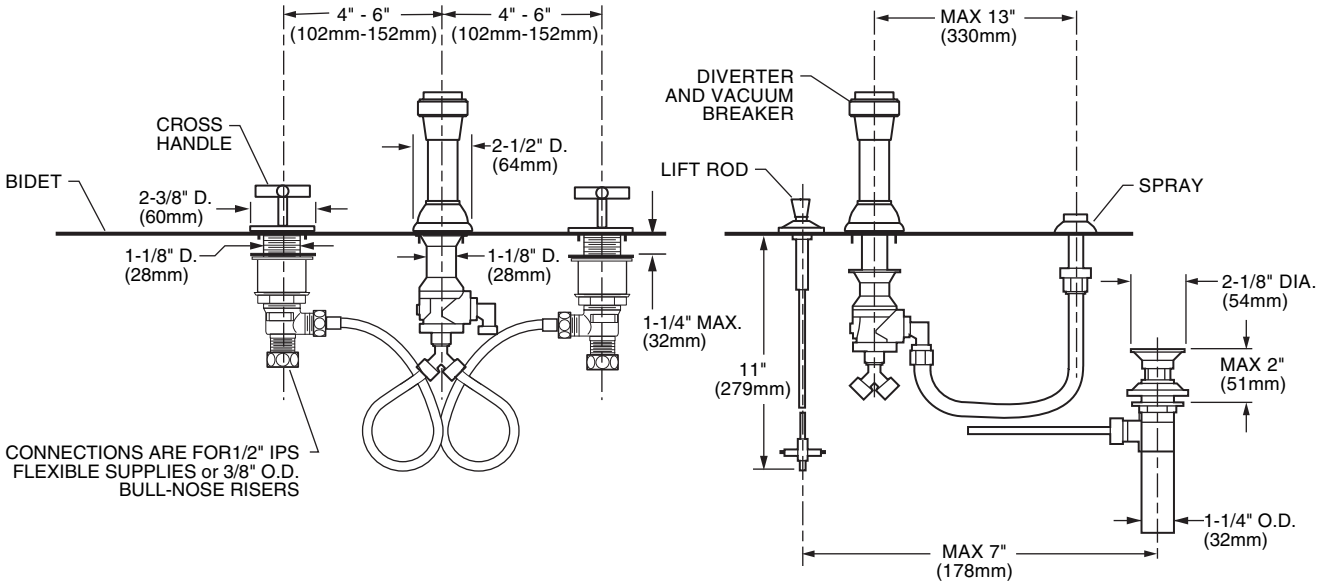

IMPORTANT: These measurements are subject to change or cancellation. No responsibility is assumed for use of superseded or voided pages.

© 2008 JADO, Inc.

CODES & STANDARDS
These products meet and exceed the following codes and standards:
ASME A112.18.1
CSA B125

© 2008 JADO, Inc.