JADO

IQ™
3/4" Thermostatic Mixing Valve



Features:
- Ceramic disc valve cartridge
- Cast brass valve body with built-in check stops
- Adjustable hot limit safety stop
- Wax Thermostatic Unit permits shuttle valve to move between the hot and cold seats to maintain the preselected constant water temperature

Maximum Temperature Limit: 112°

Kit Options	Handle Type	Product Number
3/4" Thermostatic Mixing Valve Set	Cross	832/780

Rough & Trim Options	Handle Type	Product Number
Trim Only	Cross	832/707
Rough Only		875/614/191

Extension Kits	Product Number
Handle Extension Kit	H960892.191

Available Finishes:	Finish Code
Polished Chrome	100
UltraSteel (PVD)	355

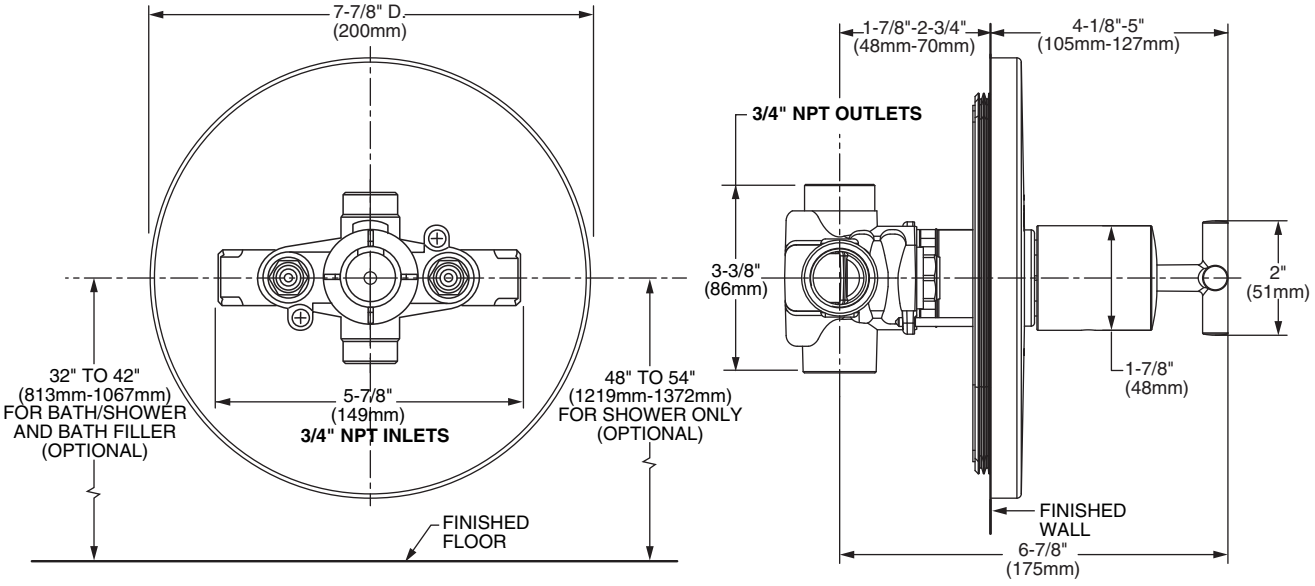

IMPORTANT: These measurements are subject to change or cancellation. No responsibility is assumed for use of superseded or voided pages.

© 2008 JADO, Inc.

CODES & STANDARDS
These products meet and exceed the following codes and standards:
ASME A112.18.1
CSA B125
ASSE1016

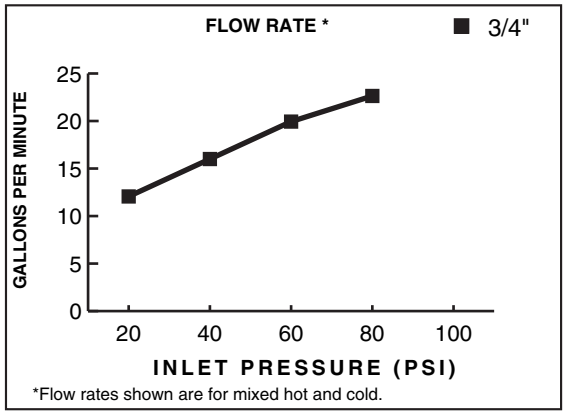

© 2008 JADO, Inc.