JADO

Contemporary Soap Dispenser

Kitchen Accessory

Features:

- 4" spout provides greater reach
- Large 19oz. bottle capacity
- Available in JADO Kitchen finishes
- Top fill with sealed shroud
- Dezincificated brass protects against aggressive components of soap

Description	Product Number
Contemporary Soap Dispenser	800/702

Available Finishes	Finish Code
Polished Chrome	100
Brushed Nickel	144
UltraSteel	355

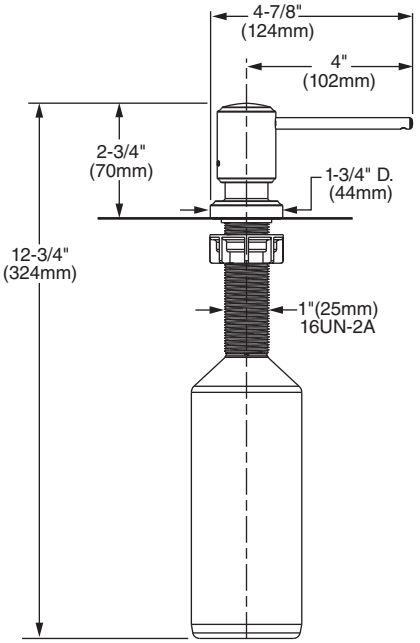

IMPORTANT: These measurements are subject to change or cancellation. No responsibility is assumed for use of superseded or voided pages.

© 2012 JADO, Inc.