IQ™
Hand Towel Holder



Features:
- Solid Brass Construction
- Concealed Mounting

	Product Number
Hand Towel Holder	032/200

Available Finishes:	Finish Code
Polished Chrome	100
UltraSteel (PVD)	355

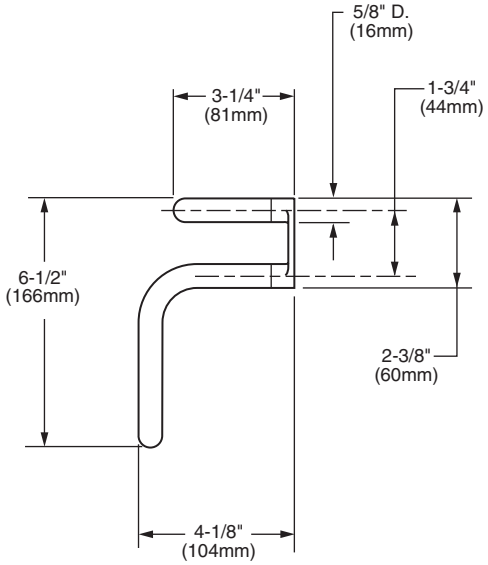

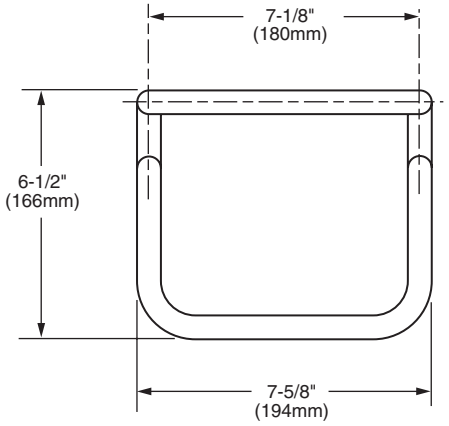

IMPORTANT: These measurements are subject to change or cancellation. No responsibility is assumed for use of superseded or voided pages.

© 2008 JADO, Inc.