JADO

IQ™
Single Lever Monoblock Faucet



Features:
- Cast brass spout and body
- 6" swivel spout
- Includes 1-1/4" drain assembly

Maximum Flow Rate: 2.2 GPM (8.3L/min)

	Handle Type	Product Number
Single Lever Monoblock Faucet	Lever	832/001

Available Finishes:	Finish Code
Polished Chrome	100
UltraSteel (PVD)	355

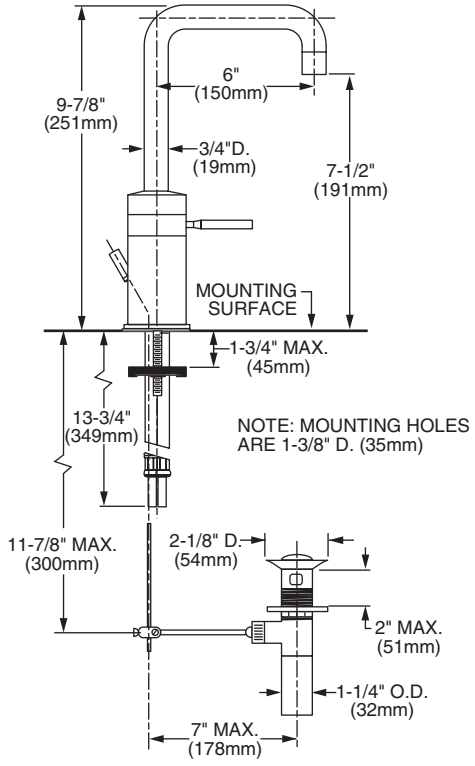

IMPORTANT: These measurements are subject to change or cancellation. No responsibility is assumed for use of superseded or voided pages.

© 2008 JADO, Inc.

CODES & STANDARDS
These products meet and exceed the following codes and standards:
ASME A112.18.1
CSA B125
NSF 61/Section 9

Meets the American Disabilities Act Guidelines and **ANSI A117.1** Requirements for the physically challenged.

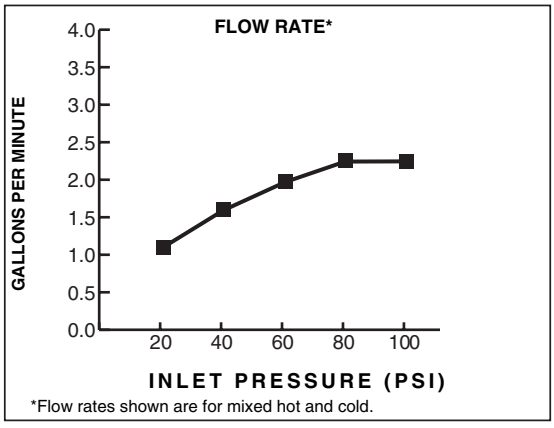

*Flow rates shown are for mixed hot and cold.

© 2008 JADO, Inc.