IQ™
Widespread Lavatory Faucet



Features:

- Cast brass spout and side valves
- Ceramic disc valve cartridge
- Flexible Hose Connections for 6"-12" installations
- Includes 1-1/4" drain assembly

Maximum Flow Rate: 2.2 GPM (8.3L/min)

	Handle Type	Product Number
Widespread Faucet	Cross	832/303

Available Finishes:	Finish Code
Polished Chrome	100
UltraSteel (PVD)	355

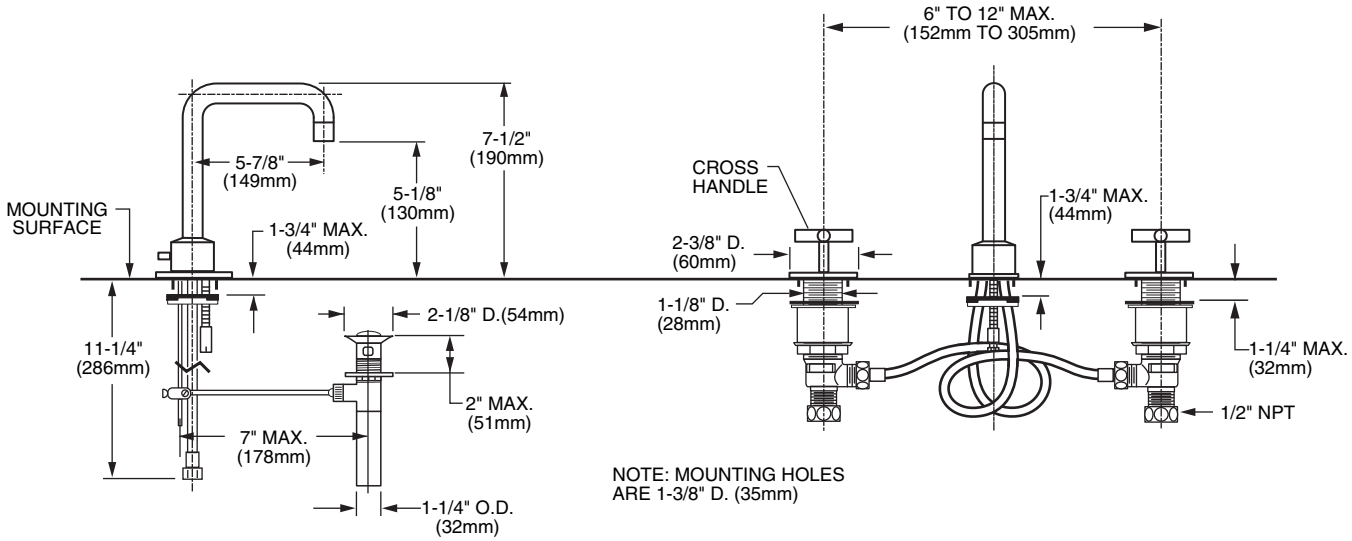

IMPORTANT: These measurements are subject to change or cancellation. No responsibility is assumed for use of superseded or voided pages.

© 2008 JADO, Inc.

CODES & STANDARDS
These products meet and exceed the following codes and standards:
ASME A112.18.1
CSA B125
NSF 61/Section 9

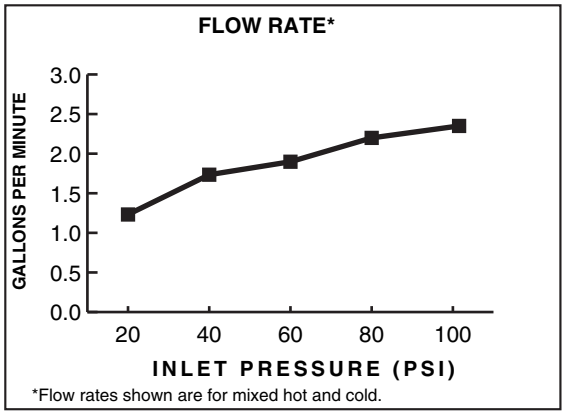

© 2008 JADO, Inc.