

Features:

- European Minimalist Design
- Cast brass spout and valves
- Ceramic disc valve cartridge
- Hand shower features 5 ft. (1.5m) metal hose

Maximum Flow Rate: 2.2 GPM (8.3L/min)

	Handle Type	Product Number
Roman Tub Set	Knob	814/083
Roman Tub Set w/Hand Shower	Knob	814/084

Available Finishes:	Finish Code
Polished Chrome	100

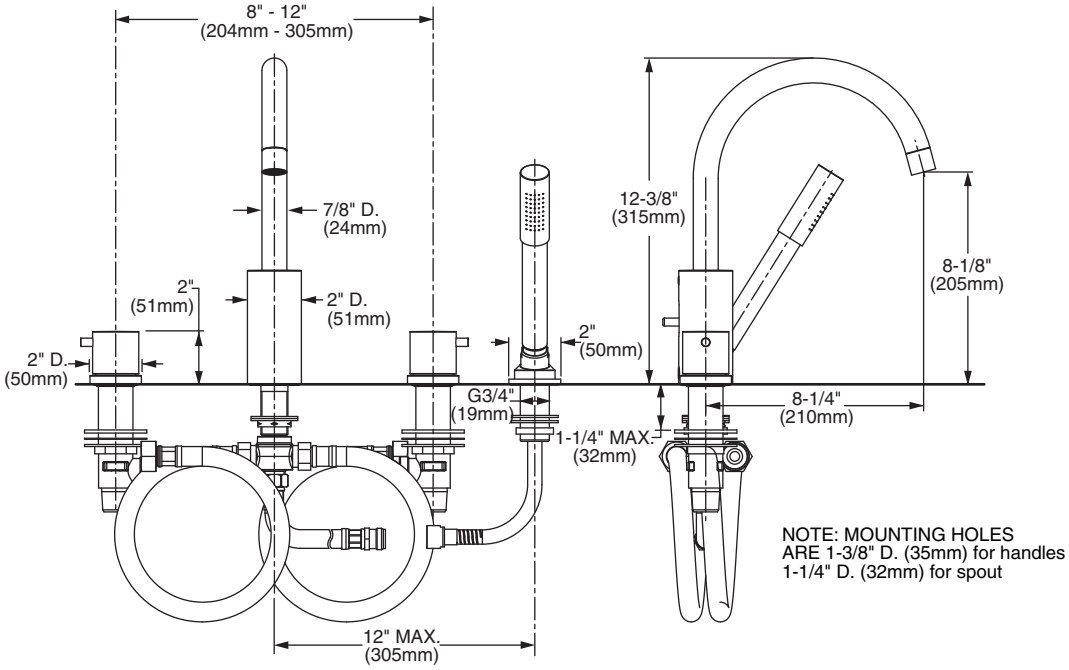

IMPORTANT: These measurements are subject to change or cancellation. No responsibility is assumed for use of superseded or voided pages.

© 2008 JADO, Inc.

CODES & STANDARDS
These products meet and exceed the following codes and standards:
ASME A112.18.1
CSA B125

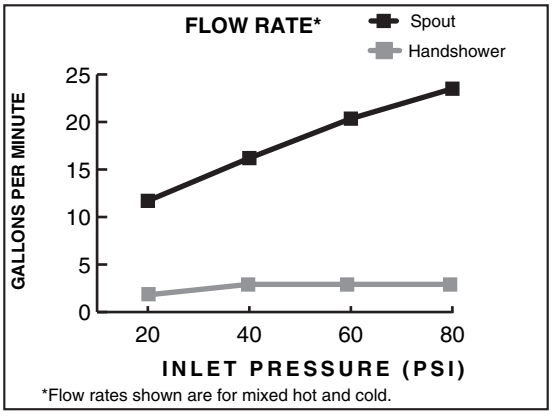

© 2008 JADO, Inc.