

Features:

- European Minimalist Design
- Solid Brass Construction
- Concealed Mounting
- Stainless Steel Tumbler Holder
- Glass Tumbler

	Product Number
Tumbler	014/141

Available Finishes:	Finish Code
Polished Chrome	100

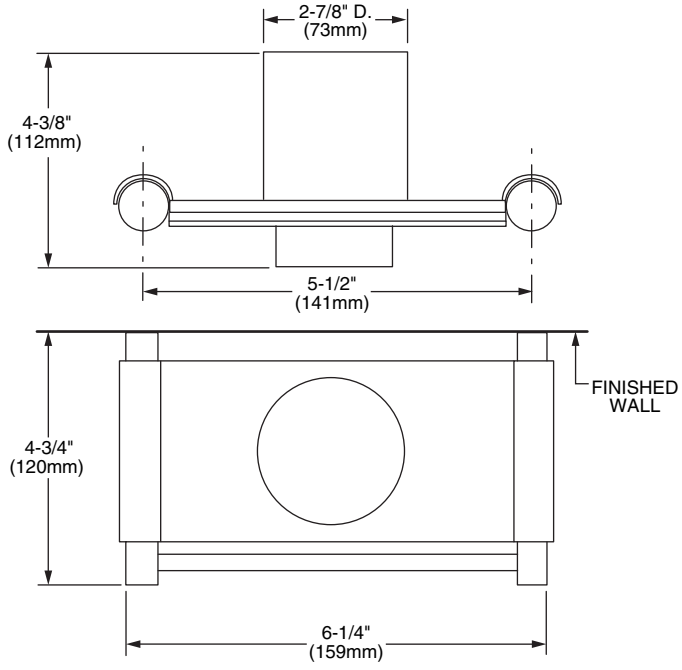

IMPORTANT: These measurements are subject to change or cancellation. No responsibility is assumed for use of superseded or voided pages.

© 2008 JADO, Inc.