Two-Handle Wall Mount Faucet

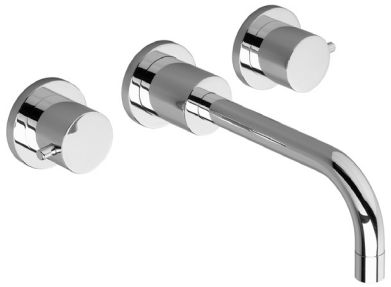

Features:

- European Minimalist Design
- Cast brass spout and side valves
- Ceramic disc valve cartridge

Maximum Flow Rate: 2.2 GPM (8.3L/min)

Kit Options	Handle Type	Product Number
Two-Handle Wall Mount Faucet (includes Rough & Trim)	Knob	814/802

Available Finishes:	Finish Code
Polished Chrome	100

Rough & Trim Options	Handle Type	Product Number
Trim Only		814/175
Rough Only		899/997/191

Extension Kits	Product Number
Wall Mount Lavatory Extension Kit	H961614.191

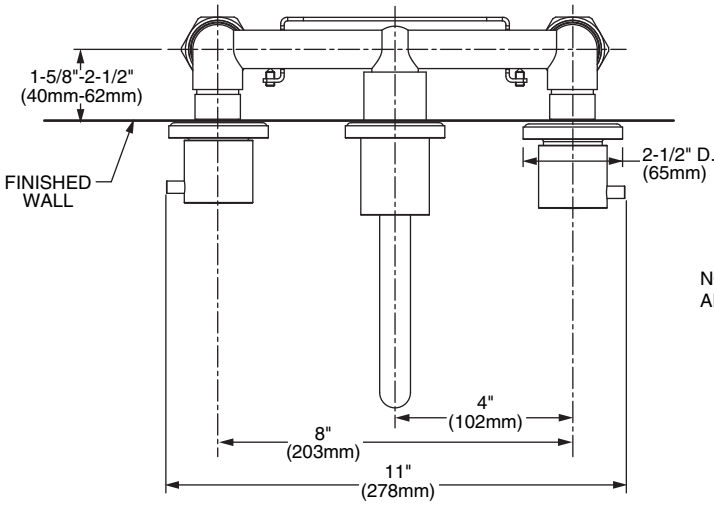

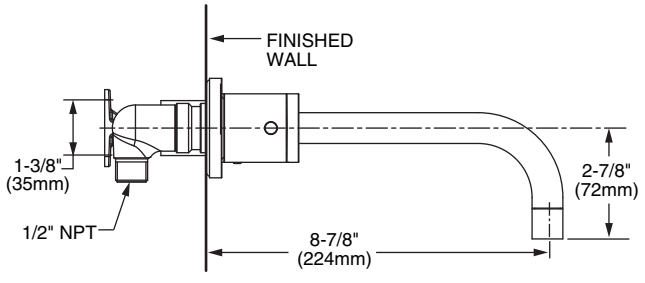

NOTE: MOUNTING HOLES
ARE 1-3/8" D. (35mm)

IMPORTANT: These measurements are subject to change or cancellation. No responsibility is assumed for use of superseded or voided pages.

© 2008 JADO, Inc.

CODES & STANDARDS
These products meet and exceed the following codes and standards:
ASME A112.18.1
CSA B125
NSF 61/Section 9

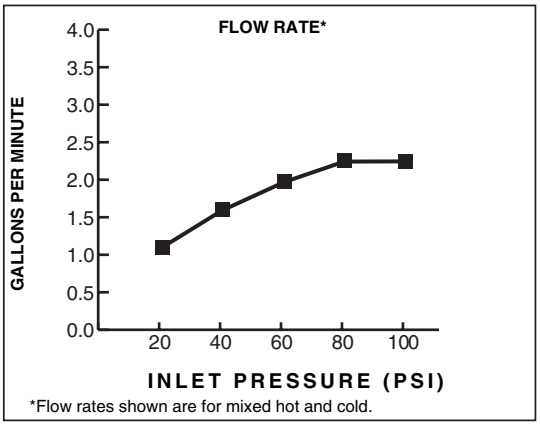

*Flow rates shown are for mixed hot and cold.

© 2008 JADO, Inc.