

Features:

- European Minimalist Design
- Alternates water flow between 2 or 3 discrete shower outlets
- 4/3 Port Diverter allows for 1 inlet and 3 outlets
- 3/2 Port Diverter allows for 1 inlet and 2 outlets
- 1/2" NPT inlets and outlets

Kit Options	Handle Type	Product Number
3/2 Port Diverter Valve	Knob	814/177
4/3 Port Diverter Valve	Knob	814/178

Available Finishes:	Finish Code
Polished Chrome	100

Rough & Trim Options	Handle Type	Product Number
Trim Only	Knob	814/077
Rough Only - 3/2 Port Diverter		876/003/191
Rough Only - 4/3 Port Diverter		876/004/191

Extension Kits	Product Number
Diverter Valve Extension Kit	H3990.191

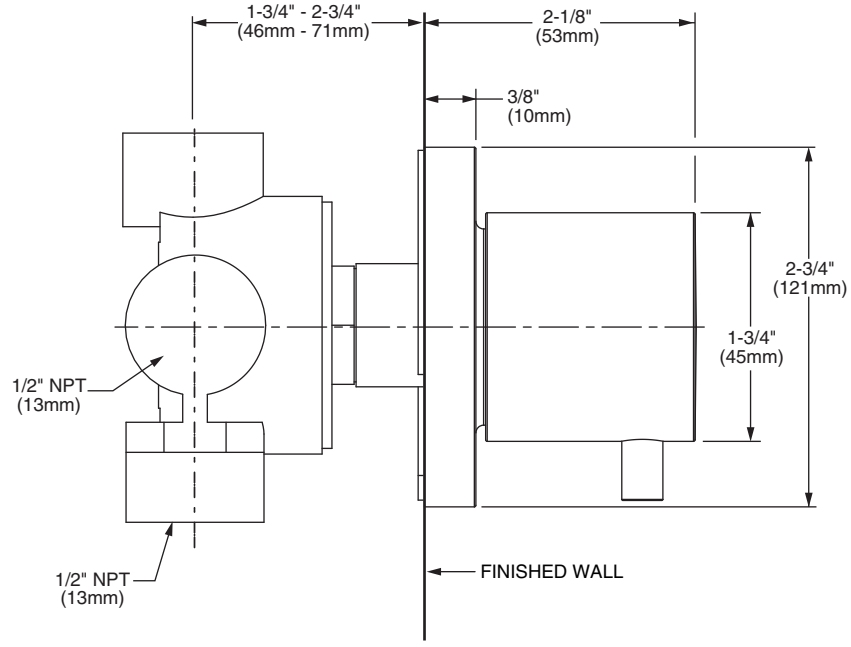

IMPORTANT: These measurements are subject to change or cancellation. No responsibility is assumed for use of superseded or voided pages.

© 2008 JADO, Inc.

CODES & STANDARDS
These products meet and exceed the following codes and standards:
ASME A112.18.1
CSA B125

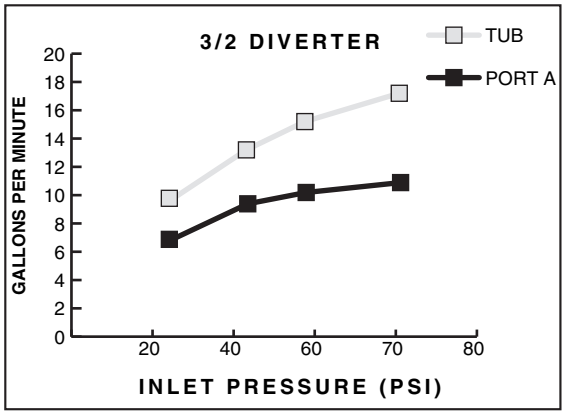

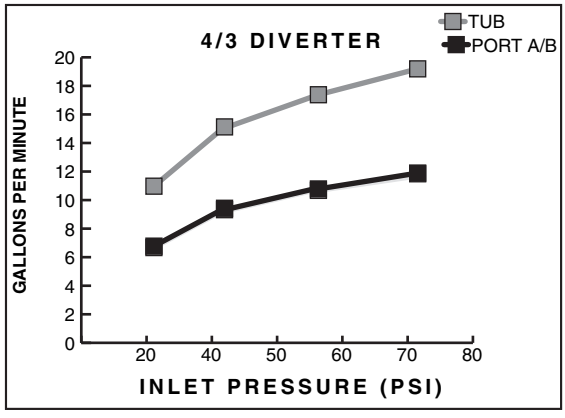

© 2008 JADO, Inc.