

Features:

- Brass cap
- 1-3/4" cut out
- Clean style to coordinate with any kitchen
- Available in JADO Kitchen finishes

Description	Product Number
Air Gap	800/600

Available Finishes	Finish Code
Polished Chrome	100
Brushed Nickel	144
UltraSteel	355

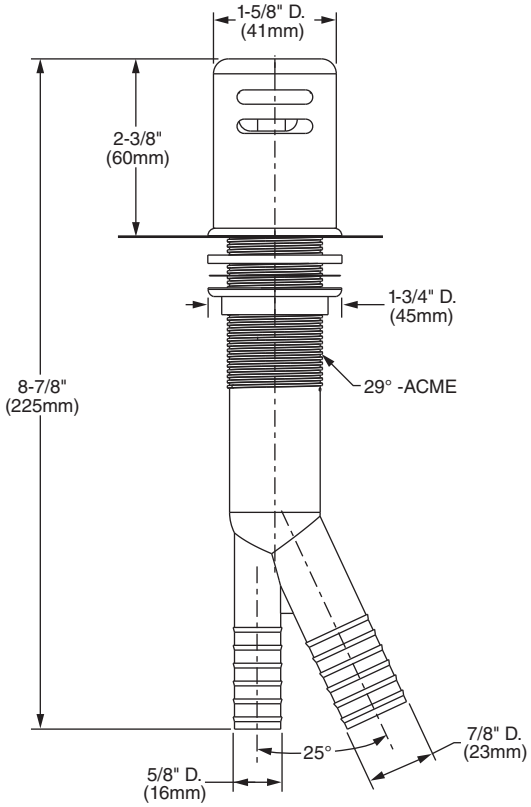

IMPORTANT: These measurements are subject to change or cancellation. No responsibility is assumed for use of superseded or voided pages.

© 2012 JADO, Inc.